## Electric Fixture Installation Notes

### FOR YOUR SAFETY - FIRE / SHOCK HAZARD

1. Risk of fire or electrical shock. Electric products should ONLY be installed by a qualified, licensed electrician or installer.
2. Installation must conform with all local codes or, in the absence of local codes, to the standard for Incandescent Lighting Fixtures ANSI/UL 1598.
3. To reduce risk of fire 100-watts per fixture or less is recommended.
4. For standard and raised socket applications, use Medium base (E26) bulbs. For candelabra applications, use Candelabra base (E12) bulbs.

*Note: Bevolo recommends 60-watt equivalent and warm white for most applications. Bulb shape is personal preferences.*

**WARNING: Failure to follow these instructions could result in fire or electric shock, which could cause property damage, personal injury or death.**

For **maintenance** and additional instructions please scan the QR code or visit:

**Bevolo.com/instructions**

**INTERTEK.COM/MARKS/ETL**
**#3097503 #3041856 #9700712**

**Installers: Please leave this sheet with the homeowner.*

BEVOLO
– established 1945 –
GAS & ELECTRIC LIGHTS

## INSTALLATION INSTRUCTIONS
## CAFÉ DU MONDE BRACKET ELECTRIC FIXTURES

**NOTE:** *Installations must always conform to local and national codes. Contact Bevolo technical support with any questions.*

**NOTE:** *Two people are required to safely install this fixture.*

*See installation drawing for reference.

1. Bracket may be located under packing foam material.
2. Removal of some glass panels from the fixture may be necessary for access to mounting hardware and for ease of installation.
3. Test fit location where fixture and bracket will be installed. Ensure there is suitable material and support for a secure installation, check with level in two directions, mark and drill hole location.
4. Attach fixture to bracket using supplied hardware. See drawing detail 'A'.
5. Using supplied fish through wire, pull electrical wires through the top of the fixture, and then through the bracket.
6. Properly connect fixture wiring to electrical source and ground.
7. Secure bracket to wall using proper mounting hardware (supplied by others.) **Note:** Installers must determine and provide appropriate hardware for the specific mounting surface and environment.
8. Level fixture at bracket using provided screw and nut. See drawing detail 'B'.
9. Carefully replace any glass panes which were removed and press firmly down on copper tabs to ensure glass is flush against copper legs.

FOR COMPLETE INSTALLATION INSTRUCTIONS AND SAFETY WARNINGS, REFERENCE THE YELLOW "ELECTRIC INSTALLATION AND USER GUIDE" INCLUDED WITH YOUR FIXTURE OR VISIT:

BEVOLO.COM/INSTRUCTIONS

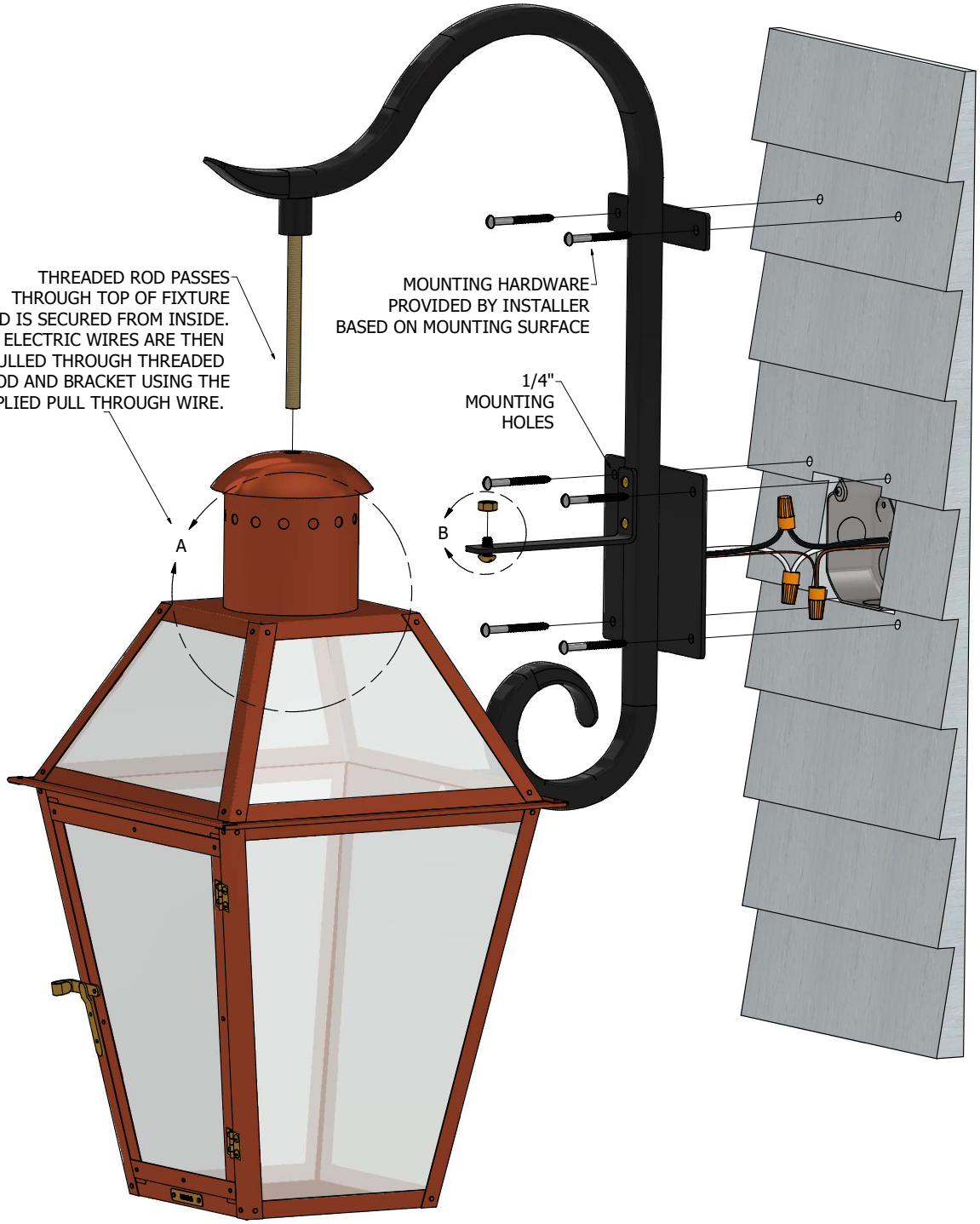


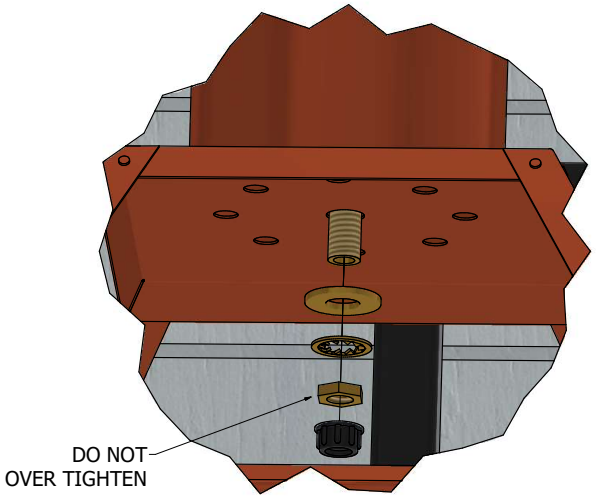


DETAIL A
(VIEWED FROM INSIDE OF FIXTURE)

INTERIOR ROOF BRACE TO THREADED ROD ATTACHMENT

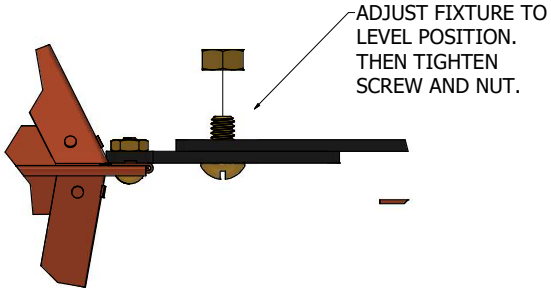


DETAIL B

LEVEL ADJUSTMENT

BEVOLO GAS & ELECTRIC LIGHTS

CAFE' DU MONDE INSTALLATION - ELECTRIC

COPYRIGHT 2024, BEVOLO GAS & ELECTRIC LIGHTS. THIS DRAWING AND ANY DESIGN OR DATA CONTAINED THEREIN ARE CONSIDERED PROPERTY OF BEVOLO GAS AND ELECTRIC LIGHTS. NEITHER THE DRAWING NOR ITS CONTENT MAY BE COPIED, REPRODUCED, OR EDITED TO A LIKENESS WITHOUT THE WRITTEN CONSENT OF BEVOLO GAS AND ELECTRIC LIGHTS.