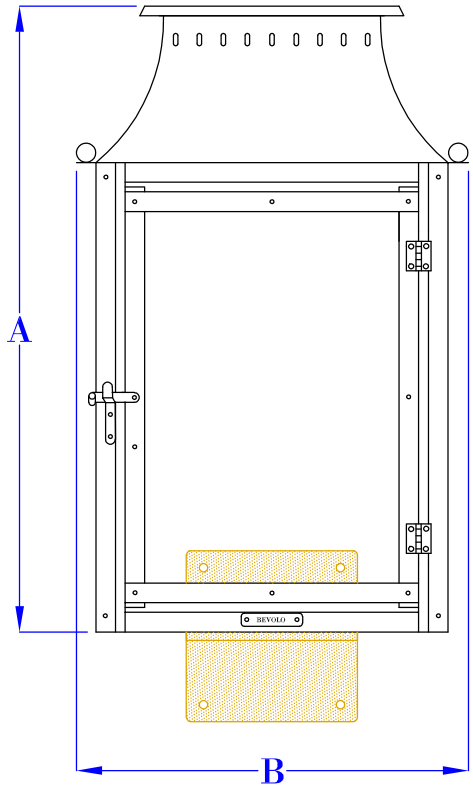

FRONT VIEW

(NTS)

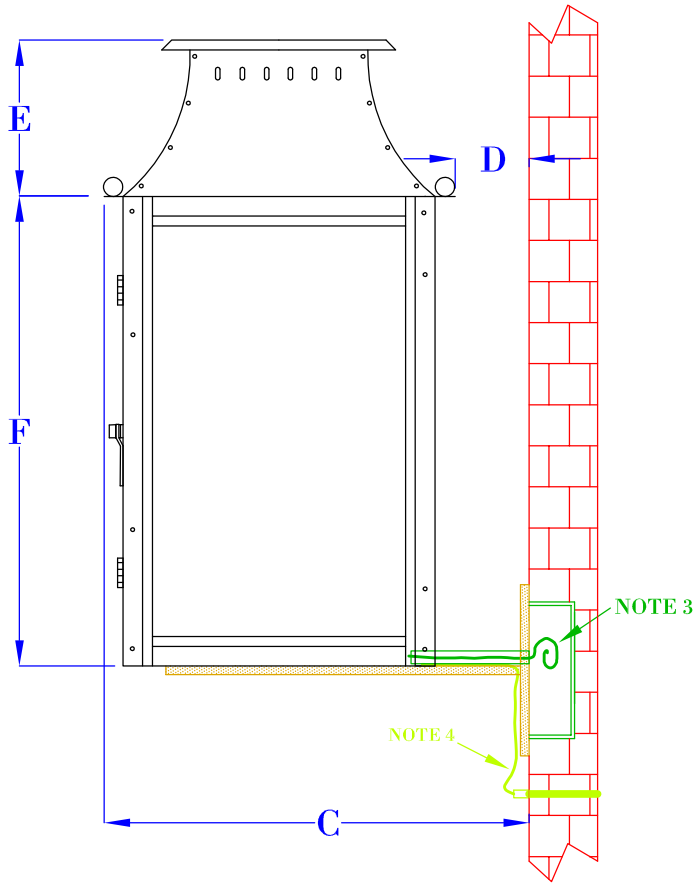

SIDE VIEW

(NTS)

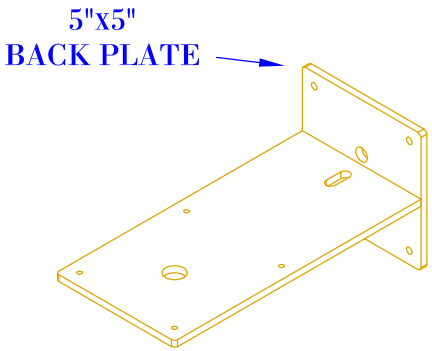

ISOMETRIC VIEW

(NTS- BRACKET ONLY)

NOTES:

1. MOUNTING HARDWARE SUPPLIED BY OTHERS
2. FIXTURES ARE HANDCRAFTED. DIMENSIONS MAY VARY PLUS OR MINUS $\frac{1}{4}$"
3. ELECTRIC LIGHTS SUPPLIED WITH 18/2 WIRE WITH GROUND
4. GAS LIGHTS SUPPLIED WITH $\frac{3}{16}$" COPPER GAS LINE AND $\frac{3}{16}$" x $\frac{1}{4}$" GAS LINE ADAPTOR

SIZE:	14"	16"	22"
A:	14 $\frac{1}{8}$"	16 $\frac{1}{8}$"	22 $\frac{1}{8}$"
B:	10 $\frac{1}{8}$"	10 $\frac{1}{8}$"	10 $\frac{1}{8}$"
C:	11 $\frac{5}{8}$"	11 $\frac{5}{8}$"	11 $\frac{5}{8}$"
D:	1 $\frac{3}{8}$"	1 $\frac{3}{8}$"	1 $\frac{3}{8}$"
E:	4"	4"	4"
F:	10 $\frac{1}{8}$"	12 $\frac{1}{8}$"	18 $\frac{1}{8}$"

BEVOLO GAS & ELECTRIC LIGHTS

LIGHT:	WILLIAMSBURG 14", 16", 22"	DATE:	DRW BY:	JJG
			APP. BY:	JJG
BRACKET:	SHELF BRACKET	10-31-18	REVISION:	1

COPYRIGHT 2018, BEVOLO GAS & ELECTRIC LIGHTS. DRAWINGS & DESIGNS ARE OWNED BY BEVOLO AND REMAIN THE SOLE AND EXCLUSIVE PROPERTY OF BEVOLO GAS & ELECTRIC LIGHTS. DRAWINGS AND DESIGNS SHALL NOT BE DUPLICATED IN WHOLE OR PART.