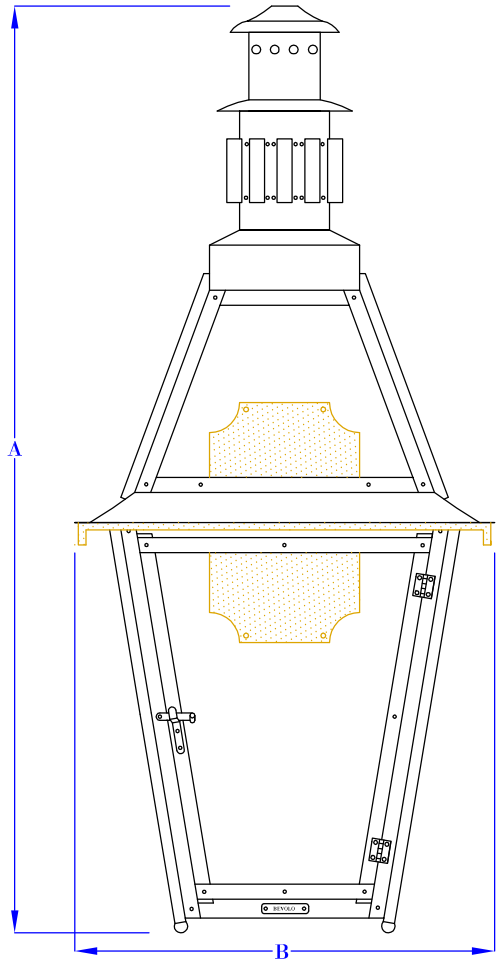

FRONT VIEW
(NTS)

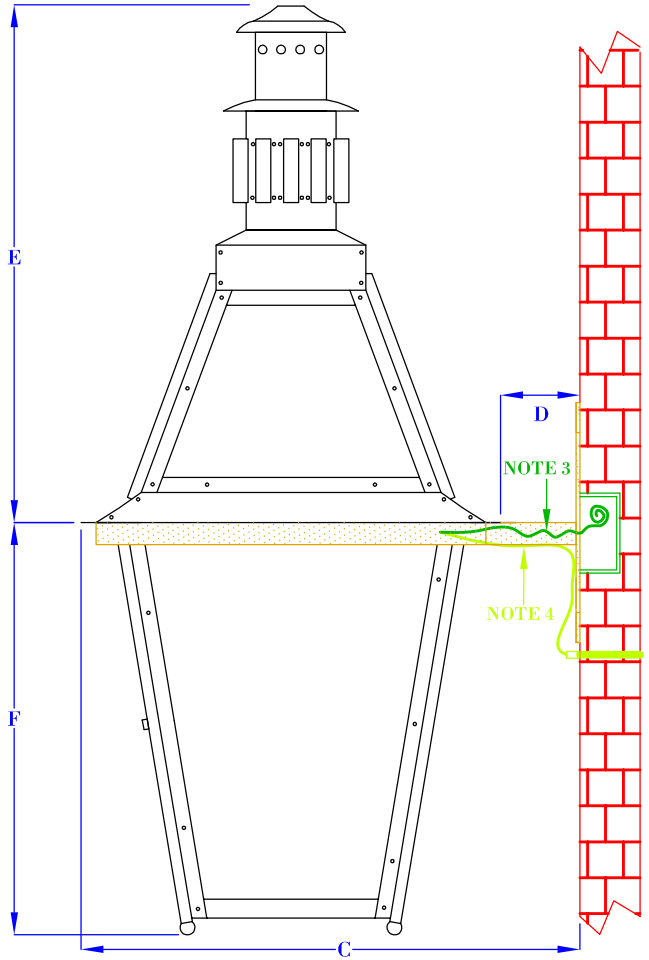

SIDE VIEW
(NTS)

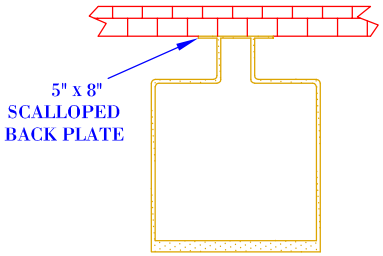

TOP VIEW
(NTS-BRACKET ONLY)

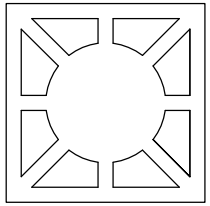

DETAIL
ROYAL SONESTA
BOTTOM

NOTES:

1. MOUNTING HARDWARE SUPPLIED BY OTHERS
2. FIXTURES ARE HANDCRAFTED. DIMENSIONS MAY VARY PLUS OR MINUS $\frac{1}{4}$"
3. ELECTRIC LIGHTS SUPPLIED WITH 18/2 WIRE WITH GROUND
4. GAS LIGHTS SUPPLIED WITH $\frac{3}{16}$" COPPER GAS LINE AND $\frac{3}{16}$" x $\frac{1}{4}$" GAS LINE ADAPTOR

SIZE:	24"	31"	38"	44"
A:	25 $\frac{3}{8}$"	30 $\frac{5}{8}$"	38"	45"
B:	13 $\frac{1}{8}$"	14"	16 $\frac{1}{4}$"	23"
C:	15 $\frac{5}{8}$"	16 $\frac{1}{2}$"	18 $\frac{3}{4}$"	25 $\frac{1}{2}$"
D:	2 $\frac{1}{2}$"	2 $\frac{1}{2}$"	2 $\frac{1}{2}$"	2 $\frac{1}{2}$"
E:	14"	17"	21 $\frac{3}{8}$"	25 $\frac{1}{2}$"
F:	11 $\frac{3}{8}$"	13 $\frac{5}{8}$"	16 $\frac{5}{8}$"	19 $\frac{1}{2}$"

BEVOLO GAS & ELECTRIC LIGHTS

LIGHT:	ROSETTA STANDARD	DATE:	DRW BY:	JJG
BRACKET:	STANDARD WALL MOUNT	11-2-15	APP. BY:	MJ
			REVISION:	5

COPYRIGHT 2015, BEVOLO GAS & ELECTRIC LIGHTS. DRAWINGS & DESIGNS ARE OWNED BY BEVOLO AND REMAIN THE SOLE AND EXCLUSIVE PROPERTY OF BEVOLO GAS & ELECTRIC LIGHTS. DRAWINGS AND DESIGNS SHALL NOT BE DUPLICATED IN WHOLE OR PART.